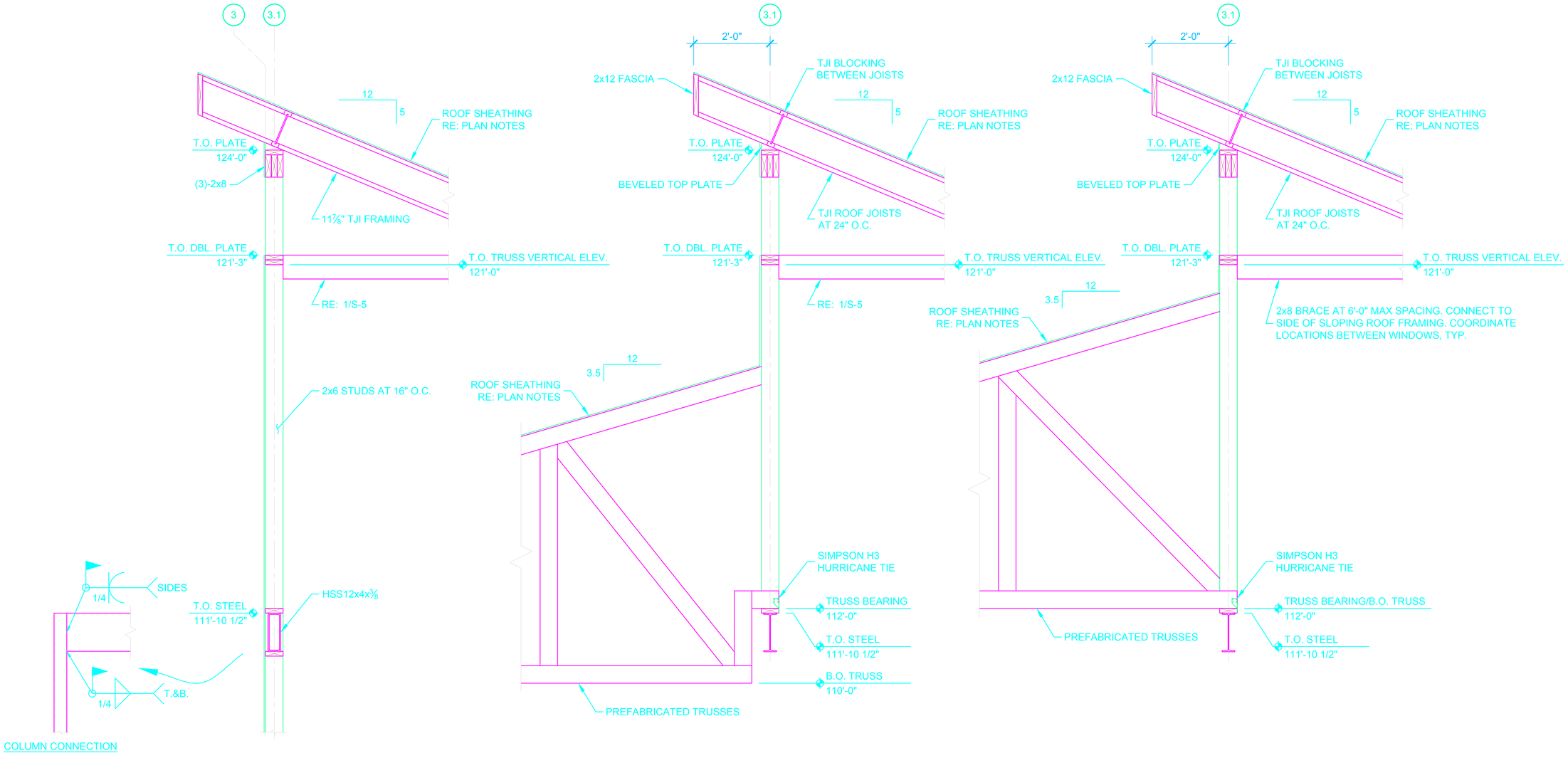

3 WALL SECTION ALONG GRID 3
1/2"=1'-0"

2 LOW TRUSSES BEARING AT CENTER BEAM
1/2"=1'-0"

1 HIGH TRUSSES BEARING AT CENTER BEAM
1/2"=1'-0"

©2022 ANDY'S BEST CAD. ALL RIGHTS RESERVED. THIS DRAWING IS THE PROPERTY OF ANDY'S BEST CAD AND IS PROTECTED BY COPYRIGHT LAWS OF THE UNITED STATES OF AMERICA. ANY UNAUTHORIZED USE OF THE INFORMATION CONTAINED HEREIN OR PART THEREOF IS STRICTLY PROHIBITED. RECEIPT OR POSSESSION THEREOF DOES NOT CONFER OR TRANSFER ANY RIGHT TO MAKE, COPY MANUFACTURE AND/OR SELL EITHER THE DRAWING OR THE ITEMS SHOWN THEREIN.

REV: | REVISION DESCRIPTION: | DATE:

DRAWN: ABC
DESIGNED:
CLIENT:
DATE: 03/02/22
SCALE: AS SHOWN

PROJECT: RESIDENTIAL GARAGE STRUCTURAL CONSTRUCTION DRAWINGS

DRAWING TITLE: STRUCTURAL DETAILS

DO NOT SCALE DRAWINGS. ALL DIMENSIONS IN FT & IN UNLESS NOTED OTHERWISE.

DRAWING NO: S104
OF