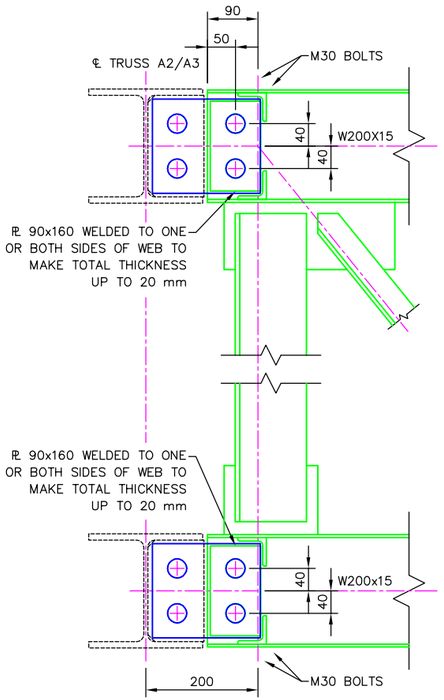

TRUSS B1 & B2
DETAIL 1

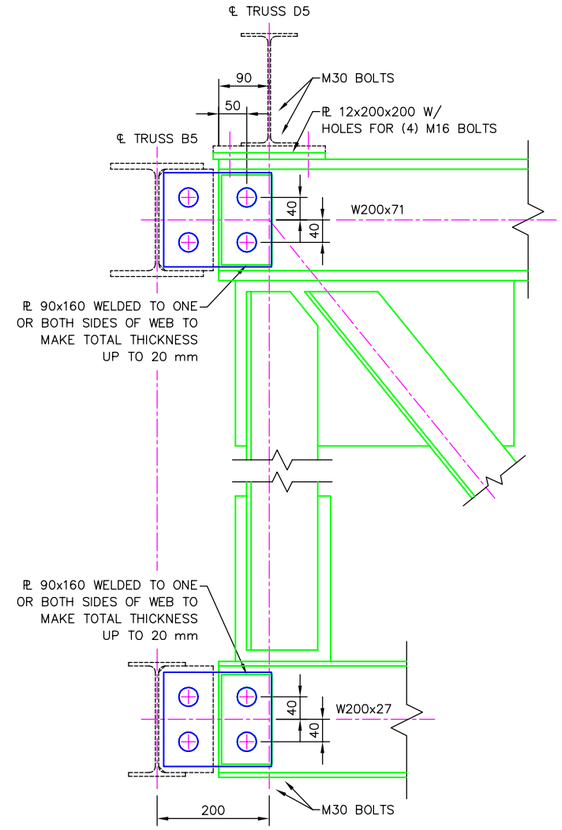

TRUSS C1,C4
DETAIL 3

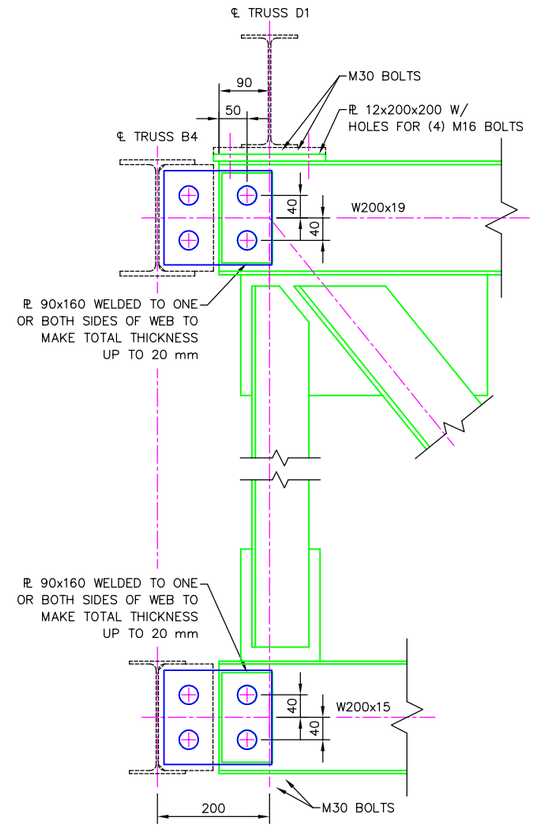

TRUSS C2,C3
DETAIL 4

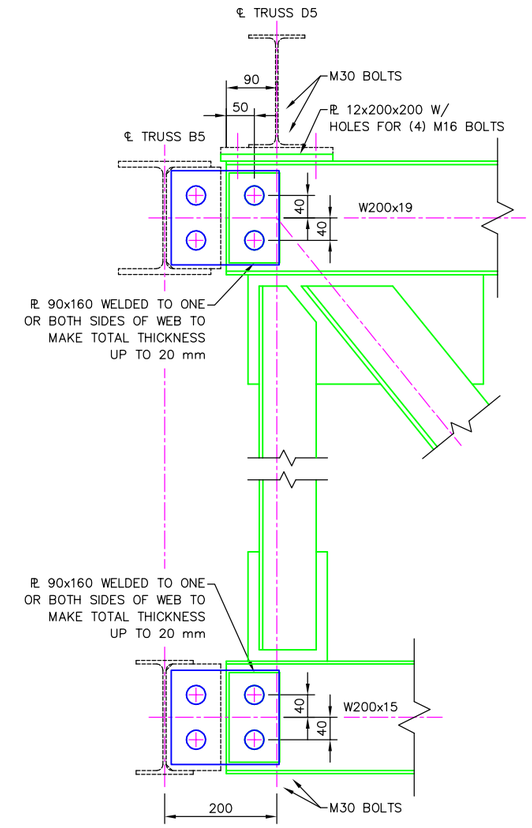

TRUSS C2,C3
DETAIL 5

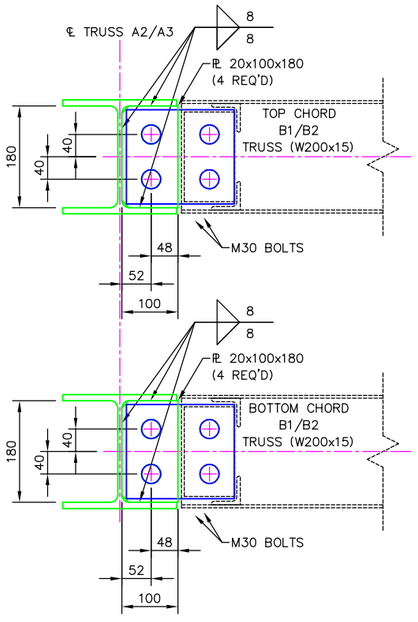

TRUSS A2 & A3
DETAIL 18

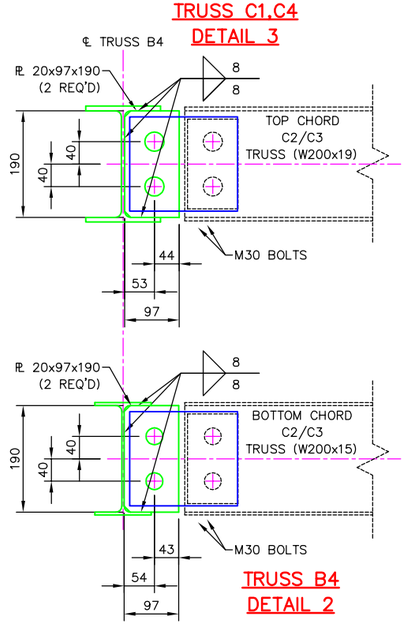

TRUSS B4
DETAIL 2

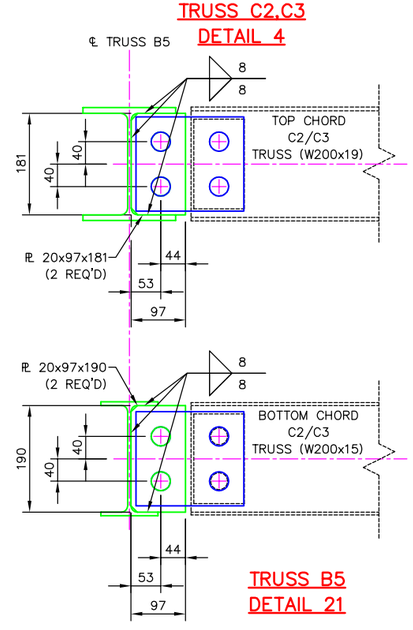

TRUSS B5
DETAIL 21

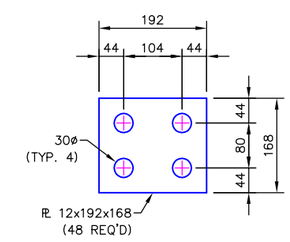

COVER PLATE FOR
B-TRUSS TO C-TRUSS
& A-TRUSS TO B-TRUSS

NOTES:
1. ALL CONNECTIONS ARE TO USE 6mm FILLET WELDS ALL-AROUND UNLESS NOTED OTHERWISE

DO NOT SCALE DRAWINGS

ALL DIMENSIONS IN MILLIMETERS UNLESS NOTED OTHERWISE

REV:	REVISION DESCRIPTION:	DATE:

ANDY'S BEST CAD
9715 S. MERIMBULA ST.
LITTLETON, CO 80130
303-791-1622
WWW.ANDYSBESTCAD.COM

DRAWN: A.LANDT
DESIGNED:
CLIENT:
DATE: 08/03/04
SCALE: 1:10

DRAWING TITLE: TRUSS DETAILS 3

DRAWING NO.: S02/215
OF

©2004 ANDY'S BEST CAD. ALL RIGHTS RESERVED. THIS DRAWING IS THE PROPERTY OF ANDY'S BEST CAD AND IS PROTECTED BY COPYRIGHT LAWS OF THE UNITED STATES OF AMERICA. ANY UNAUTHORIZED USE OF THE INFORMATION CONTAINED HEREIN OR PART THEREOF IS STRICTLY PROHIBITED. RECEIPT OR POSSESSION THEREOF DOES NOT CONFER OR TRANSFER ANY RIGHT TO MAKE, COPY MANUFACTURE AND/OR SELL EITHER THE DRAWING OR THE ITEMS SHOWN THEREIN.