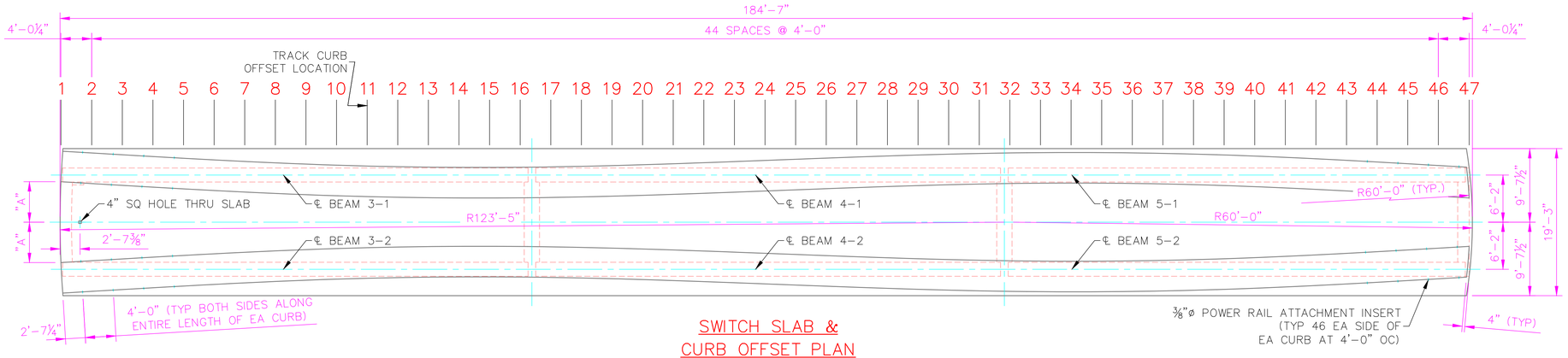

SWITCH SLAB & CURB OFFSET PLAN

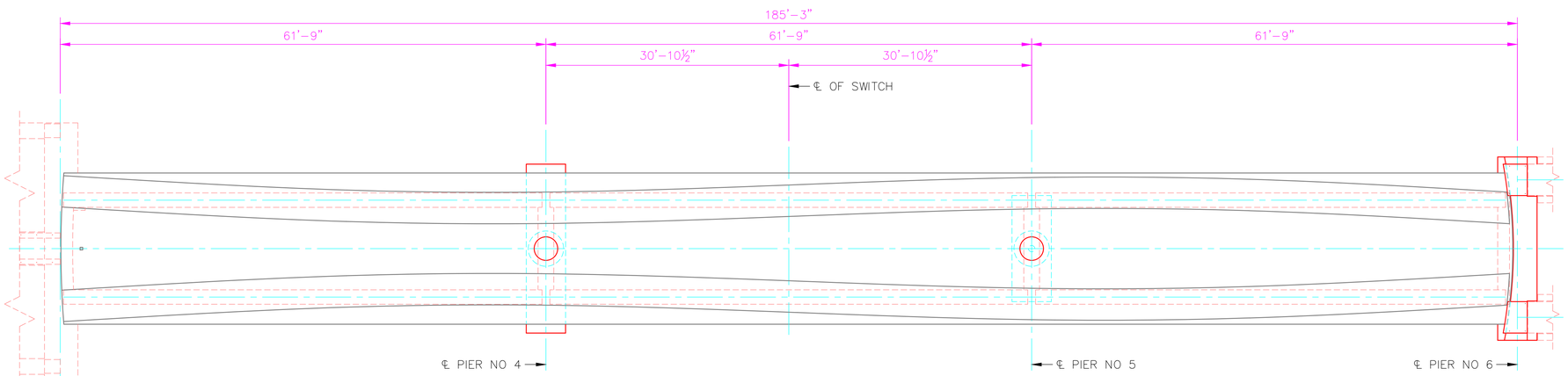

SWITCH PIER PLAN

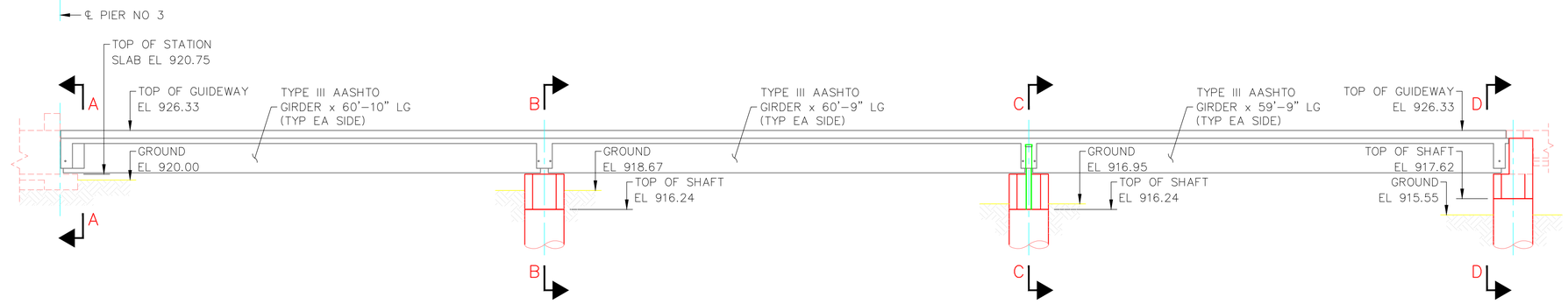

PIER NO 3 PIER NO 4 PIER NO 5 PIER NO 6

SWITCH ELEVATION AT CENTERLINE

TRACK CURB OFFSET LOCATION	
CURB POSITION	A
1	5'-3½"
2	5'-0⅝"
3	4'-9¾"
4	4'-7"
5	4'-4¼"
6	4'-1¾"
7	3'-11¼"
8	3'-9⅛"
9	3'-7⅛"
10	3'-5½"
11	3'-4⅛"
12	3'-3⅛"
13	3'-2⅜"
14	3'-2"
15	3'-1⅞"
16	3'-2¼"
17	3'-2¾"
18	3'-3⅝"
19	3'-4¾"
20	3'-6⅛"
21	3'-7⅝"
22	3'-9⅜"
23	3'-11⅛"
24	4'-0⅞"

TRACK CURB OFFSET LOCATION	
CURB POSITION	A
25	4'-2¾"
26	4'-4½"
27	4'-6¼"
28	4'-8"
29	4'-9½"
30	4'-10¾"
31	4'-11⅞"
32	5'-0¾"
33	5'-1¼"
34	5'-1⅜"
35	5'-1¼"
36	5'-0⅞"
37	5'-0"
38	4'-11"
39	4'-9½"
40	4'-7¾"
41	4'-5¾"
42	4'-3½"
43	4'-1"
44	3'-10⅜"
45	3'-7⅝"
46	3'-4⅞"
47	3'-2"

REV: REVISION DESCRIPTION: DATE:

ANDY'S BEST CAD
1323 CARLYLE PARK CIRCLE
HIGHLANDS RANCH, CO 80129
303-808-3352
WWW.ANDYSBESTCAD.COM

DRAWN: ABC
DESIGNED:
CLIENT:
DATE: 03/14/22
SCALE: AS SHOWN

PROJECT: SWITCH SUPERSTRUCTURE REINFORCED CONCRETE ENGINEERING DRAWINGS

DRAWING TITLE: SWITCH SUPERSTRUCTURE DETAILS #1

DRAWING NO: RC102
OF

© 2022 ANDY'S BEST CAD. ALL RIGHTS RESERVED. THIS DRAWING IS THE PROPERTY OF ANDY'S BEST CAD AND IS PROTECTED BY COPYRIGHT LAWS OF THE UNITED STATES OF AMERICA. ANY UNAUTHORIZED USE OF THE INFORMATION CONTAINED HEREIN OR PART THEREOF IS STRICTLY PROHIBITED. RECEIPT OR POSSESSION THEREOF DOES NOT CONFER OR TRANSFER ANY RIGHT TO MAKE, COPY, MANUFACTURE AND/OR SELL EITHER THE DRAWING OR THE ITEMS SHOWN THEREIN.