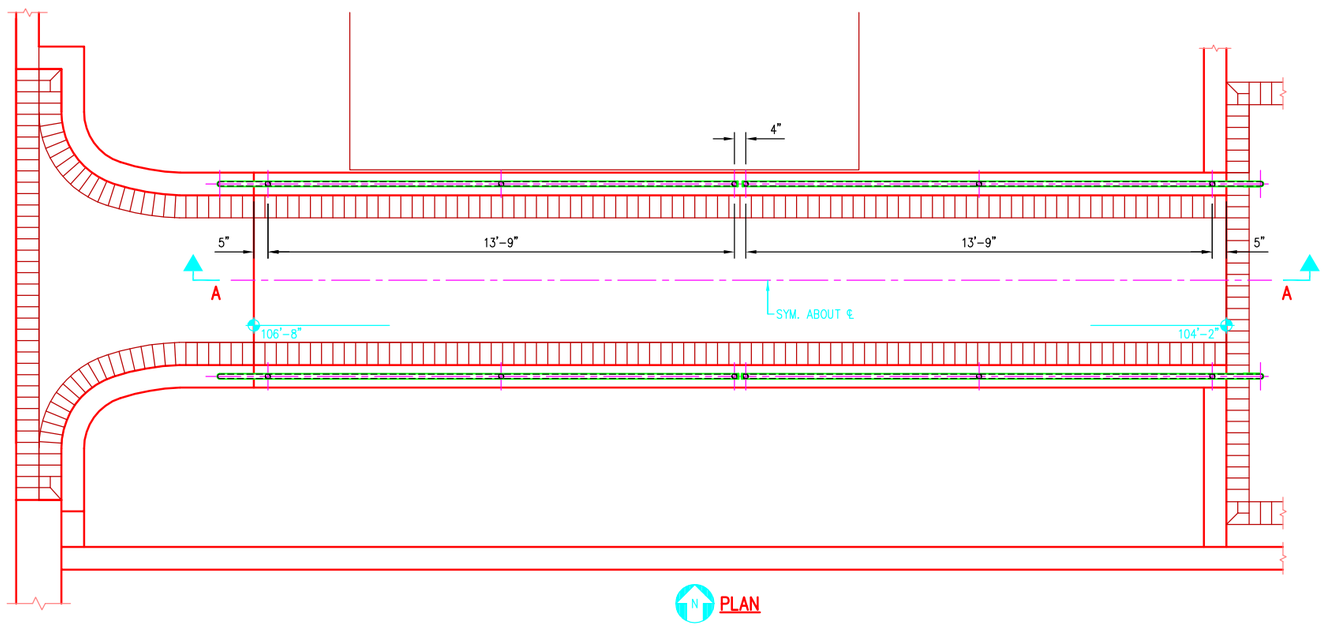

PLAN

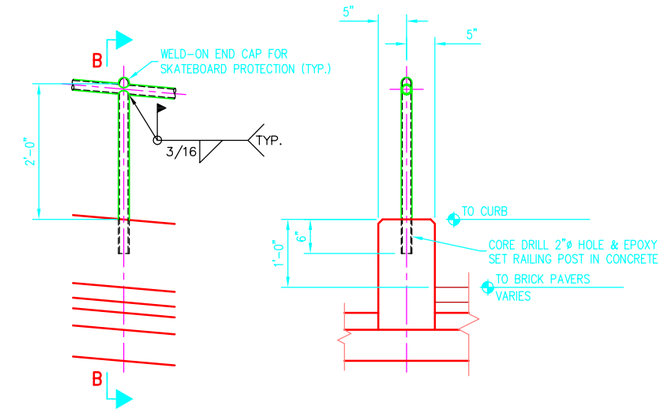

DETAIL A

B-B

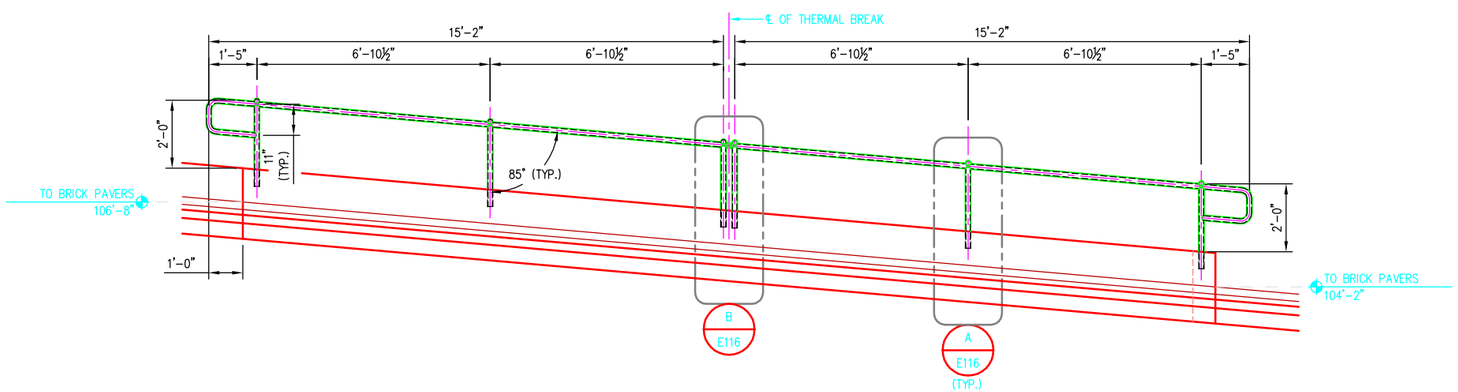

A-A
(ELEVATION)

RAILING TYPE G1

20RTG1

RE: SHT. A0.02, DETAIL 1
RE: SHT. A3.41, DETAIL 7

RAILING TYPE G2

20RTG2

RE: SHT. A0.02, DETAIL 1
RE: SHT. A3.41, DETAIL 7

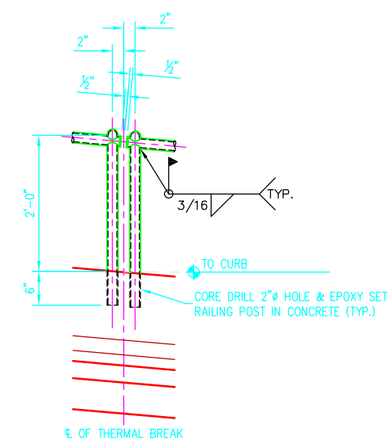

DETAIL B

REV.	REVISION DESCRIPTION:	DATE:

ANDY'S BEST CAD
9715 S. MERIMBULA ST.
LITTLETON, CO 80130
303-791-1622
WWW.ANDYSBESTCAD.COM

DRAWN: A.LANDT
DESIGNED: A.LANDT
CLIENT:
DATE: 07/10/09
SCALE: 1/2"=1'-0"

PROJECT:
UNIVERSITY
ATHLETIC STADIUM
STRUCTURAL STEEL
HANDRAILS AND RAILINGS

DRAWING TITLE:
TYPE G
RAILING ERECTION

DRAWING NO.:
E116
OF

© 2009 ANDY'S BEST CAD. ALL RIGHTS RESERVED. THIS DRAWING IS THE PROPERTY OF ANDY'S BEST CAD AND IS PROTECTED BY COPYRIGHT LAWS OF THE UNITED STATES OF AMERICA. ANY UNAUTHORIZED USE OF THE INFORMATION CONTAINED HEREIN OR PART THEREOF IS STRICTLY PROHIBITED. RECEIPT OR POSSESSION THEREOF DOES NOT CONFER OR TRANSFER ANY RIGHT TO MAKE, COPY MANUFACTURE AND/OR SELL EITHER THE DRAWING OR THE ITEMS SHOWN THEREIN.